PENBRO KELNICK

# RESISTORS AND ASSEMBLIES

## WIRE-WOUND

**COATED AND OPEN WIRE-WOUND**

## SILICONE COATED WIRE-WOUND RESISTORS

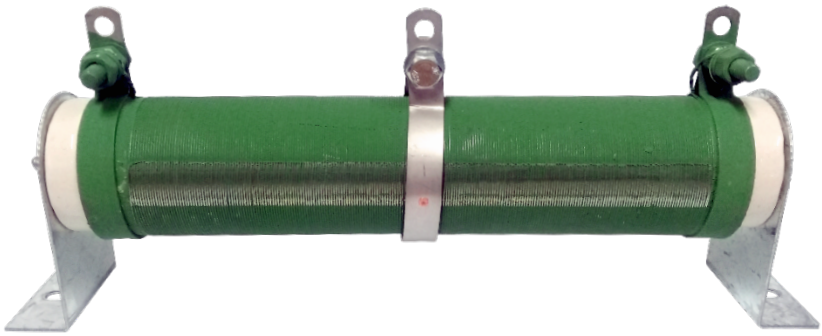

| REV | DATE | CHANGE DESCRIPTION | CHANGED BY |
|---|---|---|---|
| 4 | 2023-12-11 | Single resistors and resistor assemblies<br>Locomotive Headlight Resistor | W. M |

## DESCRIPTION
Robust ceramic core with a high temperature and chemically resistant silicone coating.

## APPLICATIONS
Resistive Loadbanks, Battery Discharging, Heating, Current Limiting.

## INDUSTRY
Mining, Rail, Manufacturing.

## ACTIVE MATERIAL
High grade chrome-nickel (Cr-Ni) alloy with a low temperature coefficient.

## MECHANICAL CHARACTERISTICS
Grade 304 stainless steel terminals and suitable for a crimp ring-lug connection with hexhead bolts or screws.

| ELECTRICAL CHARACTERISTICS | | |
|---|---|---|
| **Rated Power** | **Minimum Resistance Ω** (0.61Ø) | **Maximum Resistance Ω** (0.068Ø) |
| 30W | 13 | 5k |
| 50W | 25 | 10k |
| 100W | 40 | 15k |
| 200W | 70 | 30k |
| 250W | 80 | 35k |
| 300W | 100 | 45k |
| 400W | 120 | 55k |
| 500W | 140 | 65k |
| Resistance tolerance: +/- 5% | | |
| Higher resistance values may be available upon request<br><br>Voltage rating: 600V. Higher voltage ratings upon request<br><br>Supplied with glazed porcelain insulators<br><br>Variable slider, optional | | |

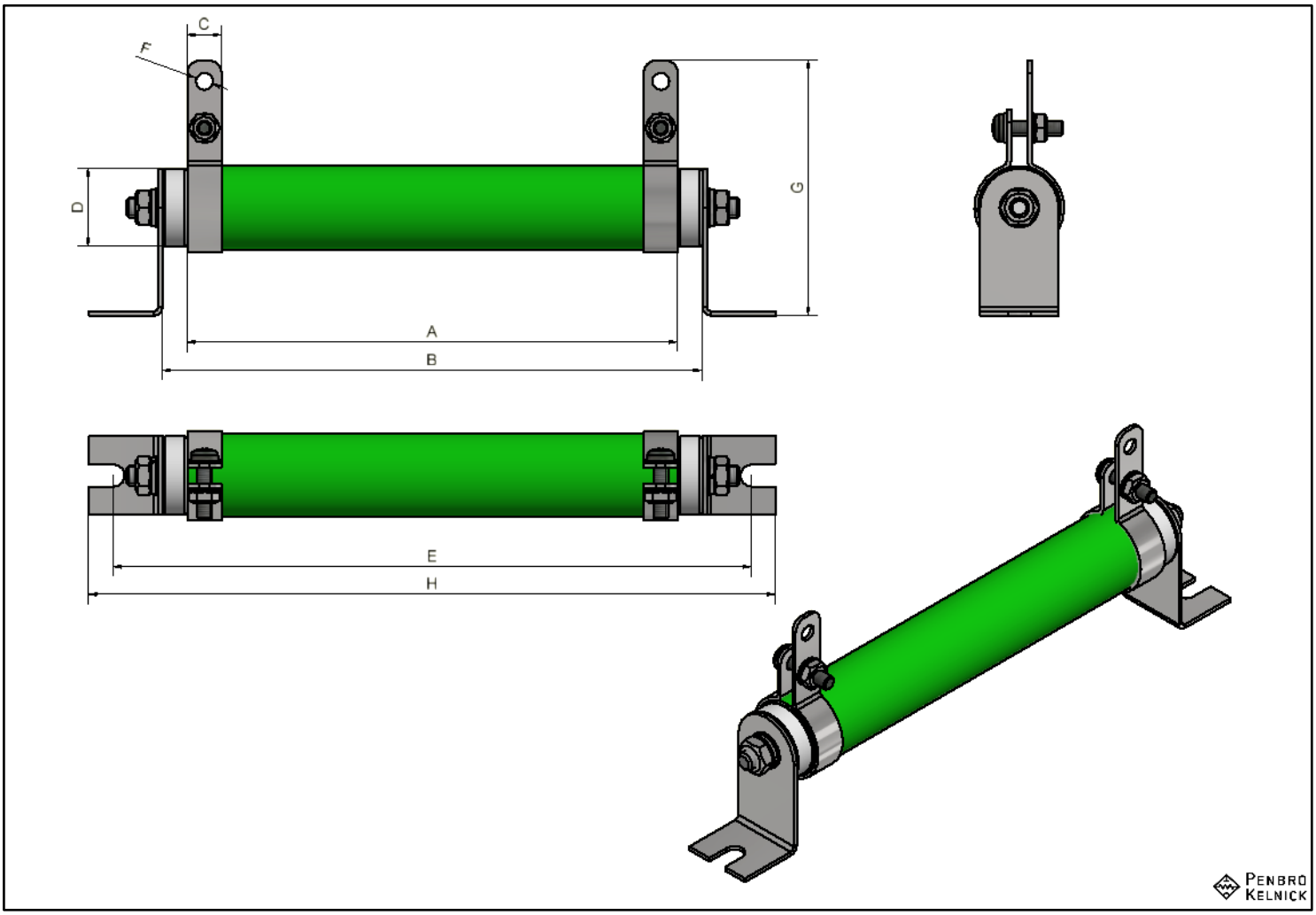


| SILICONE COATED WIRE-WOUND RESISTORS | | | | | | | | |
|---|---|---|---|---|---|---|---|---|
| Dimensions: mm | **30W** | **50W** | **100W** | **200W** | **250W** | **300W** | **400W** | **500W** |
| **A:** Tube Length | 100 | 100 | 150 | 247 | 200 | 250 | 300 | 350 |
| **B:** Length with Insulators | 110 | 120 | 170 | 267 | 220 | 270 | 320 | 370 |
| **C:** Terminal Width | 7 | 8 | | | 10 | | | |
| **D:** Tube Diameter | Ø16 | Ø31 | | | Ø45 | | | |
| **E:** Mounting Hole-Hole | 133 | 145 | 195 | 292 | 245 | 295 | 345 | 395 |
| **F:** Terminal Hole | Ø3 | Ø4 | | | Ø6 | | | |
| **G:** Height | 52 | 80 | | | 100 | | | |
| **H:** Total Length | 150 | 165 | 199 | 302 | 265 | 315 | 365 | 415 |

# OPEN WIRE-WOUND RESISTORS

**DESCRIPTION**

Non-coated wire-wound for heavy duty applications. Generally used to obtain very low resistance values

**APPLICATIONS**

Resistive Loadbanks, Battery Discharging, Voltage Dropping Circuits, Heating, Current Limiting Circuits

**INDUSTRY**

Power Utilities, Mining, Rail, Manufacturing

**ACTIVE MATERIAL**

High grade chrome-aluminium (Cr-Al or chrome-nickel (Cr-Ni) alloy with a low temperature coefficient

**MECHANICAL CHARACTERISTICS**

Terminal connections are grade 304 stainless-steel and suitable for a ring-lug connection with a hexhead bolt

| ELECTRICAL CHARACTERISTICS | | |
|---|---|---|
| **Power** | **Minimum Resistance Ω** (3.25Ø) | **Maximum Resistance Ω** (0.5Ø) |
| **100W** | ≤0.3 | 30 |
| **200W** | ≤0.6 | 35 |
| **300W** | ≤0.8 | 50 |
| **400W** | ≤1.0 | 70 |
| **500W** | ≤1.3 | 85 |
| Resistance Tolerance: +/- 5% | | |
| Voltage rating: 600V | | |
| Variable Slider, Optional | | |

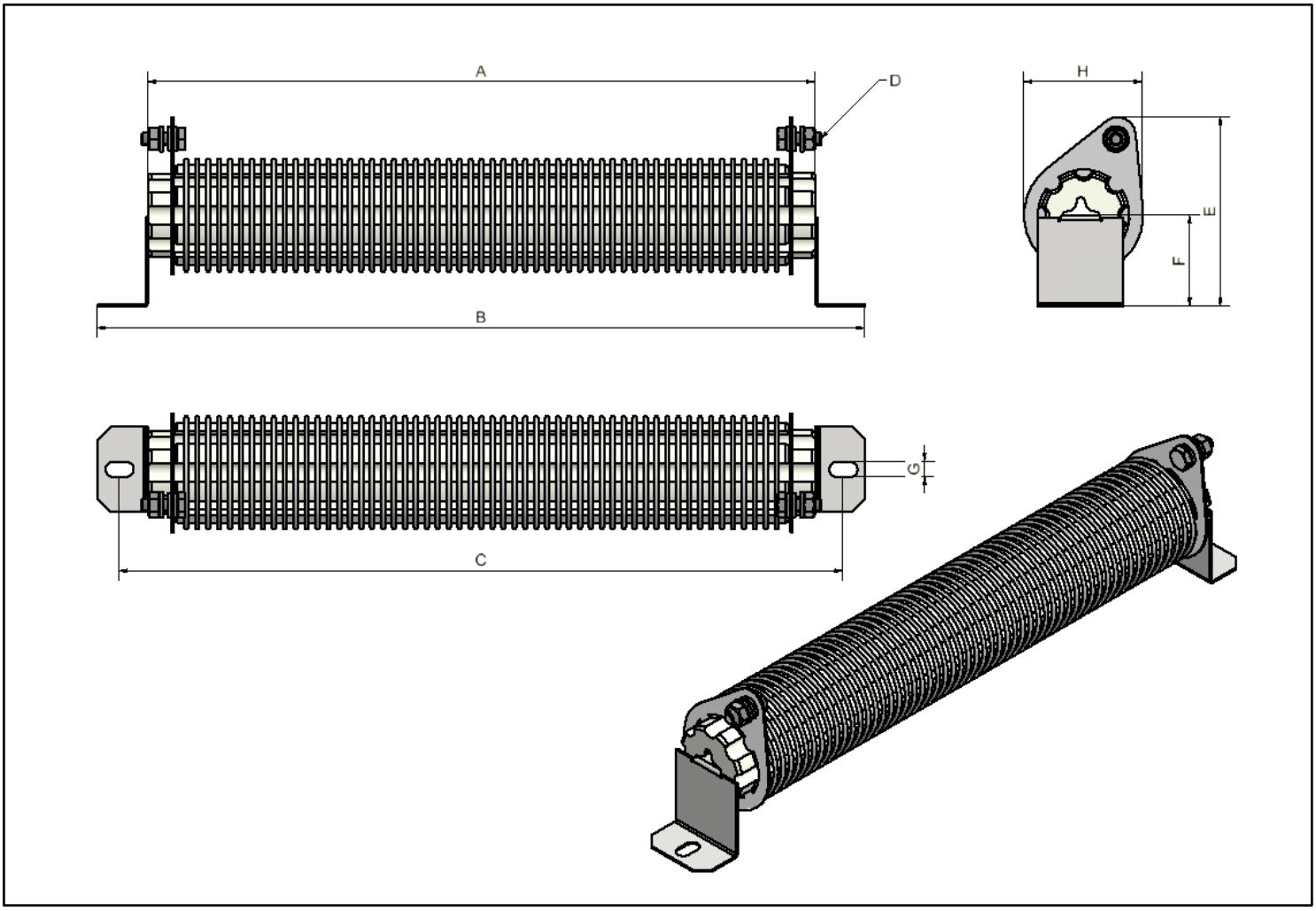


| OPEN WIRE RESISTORS | | | | | |
|---|---|---|---|---|---|
| Dimensions: mm | **100W** | **200W** | **300W** | **400W** | **500W** |
| **A:** Tube Length | 105 | 155 | 205 | 255 | 305 |
| **B:** Total Length | 147 | 197 | 247 | 305 | 345 |
| **C:** Fixing Hole-Hole | 139 | 189 | 239 | 280 | 325 |
| **D:** Terminal Bolt | M6 | | | | |
| **E:** Height | 90 | | | 110* | |
| **G:** Mounting Hole | Ø6 | | | | |
| **H:** Width | 55 | | | | |

# RESISTOR ASSEMBLIES

## Locomotive Headlight Resistor

**DESCRIPTION**

Multiple resistors may be assembled to form a single assembly

- Where a single resistor is limited to a power rating of 500W, an assembly of two resistors for example, will increase the power rating to 1000W.
- Two or more resistors may also be used for a specific purpose such as a Locomotive Headlight Resistor where two resistors are required for the dual headlamp.
- More than two resistors are more suitably enclosed in a steel enclosure. Refer to our Brake Resistor brochure.

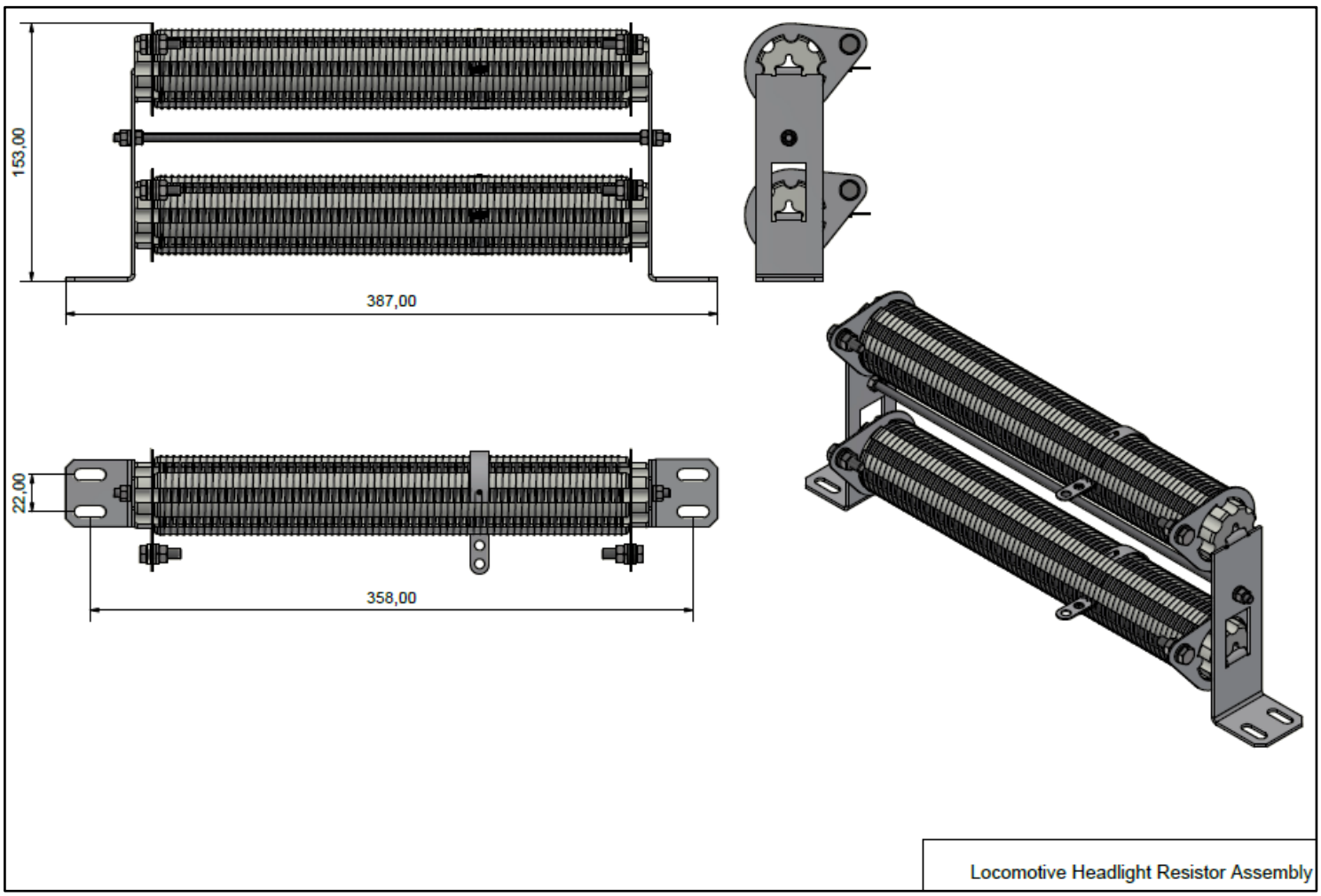




tel: +2712 719 9065 | email: info@penbro.co.za | web: www.penbro.co.za